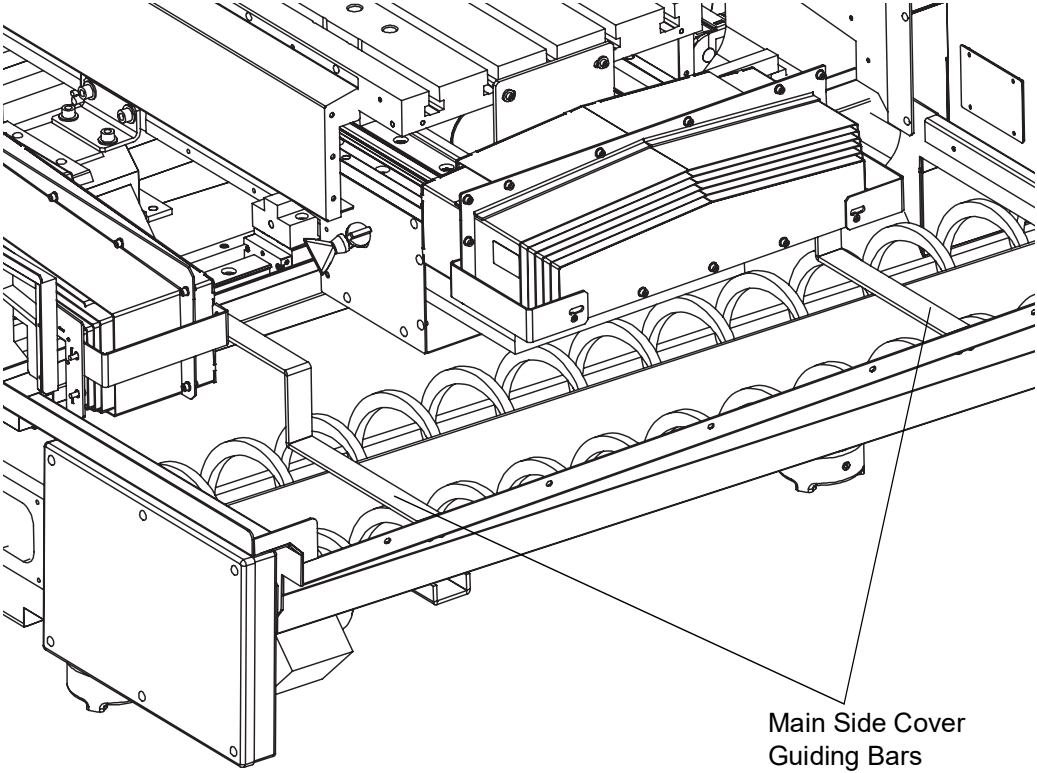
Main Side Cover
Guiding Bars